SPECIFICATION APPLIED

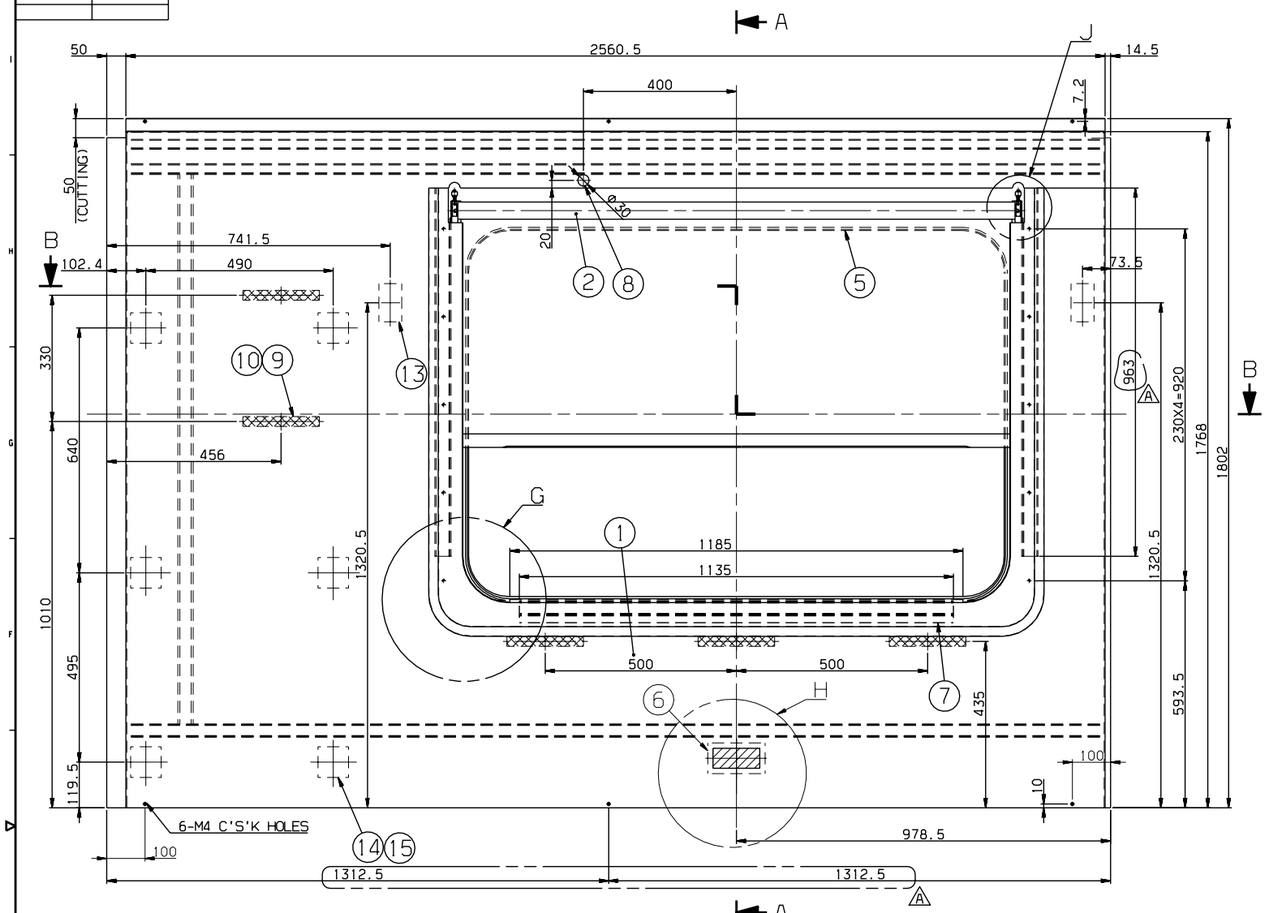

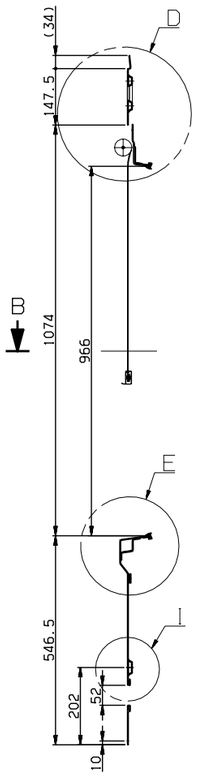

SECTION A-A

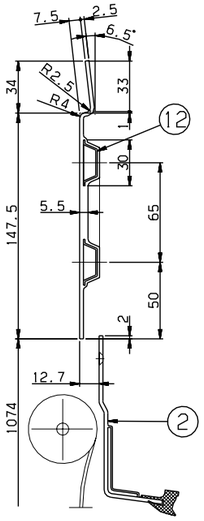

DETAIL D
SCALE=1/2

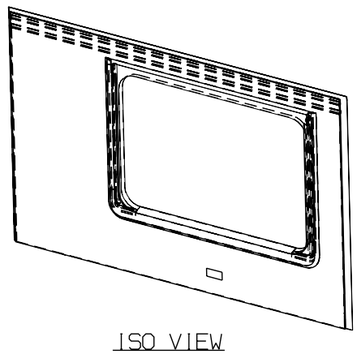

ISO VIEW

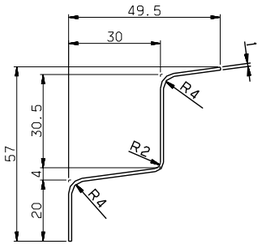

DETAIL #7
SCALE=1/1

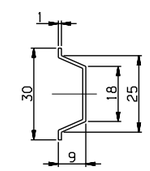

DETAIL #12
SCALE=1/1

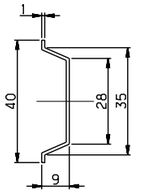

DETAIL #11
SCALE=1/1

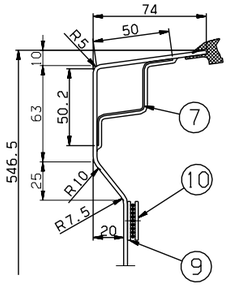

DETAIL E
SCALE=1/2

NOTE

1. AN INTERIOR PANEL'S COLOR(RAL 7047) AND SURFACE SHALL BE MANUFACTURED AFTER SAMPLE'S APPROVAL BY CUSTOMER
2. PART 5 SHALL BE CUT ADEQUATELY AND USED
3. PART 6 IS TO PROTECT.
4. PART 2 SHALL BE WELL OPERATED UNDER CONDITION OF ASSEMBLY
5. PART 9 SHALL BE FIXED ON THE PART 1, AND PART 10 SHALL BE DELIVERED SEPERATETLY
6. THE INTERFACE BETWEEN PART 1 AND PART 2 SHALL BE STRONGLY SEALED

A 7. PART 4 SHOULD BE APPLIED WITH PART 16.

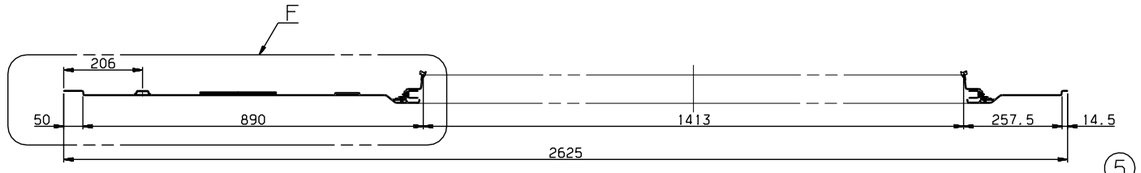

SECTION B-B

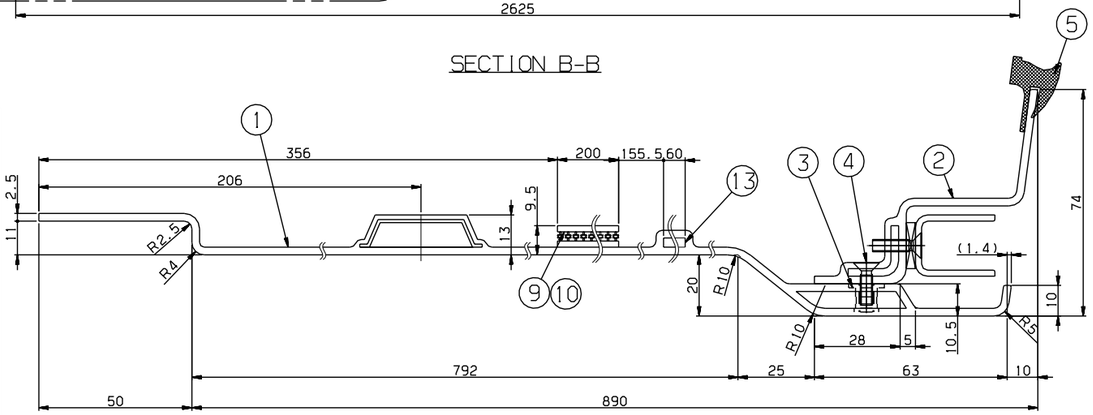

DETAIL F
SCALE=1/1

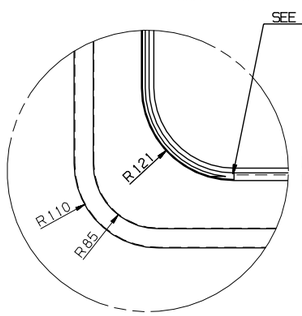

DETAIL G
SCALE=1/4

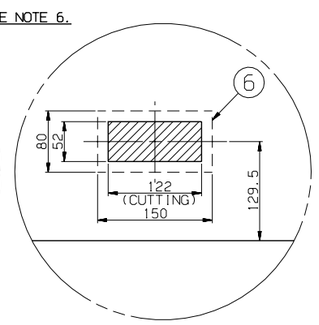

DETAIL H
SCALE=1/4

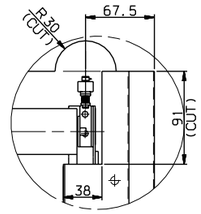

DETAIL J
SCALE=1/3

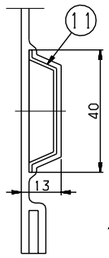

DETAIL I
SCALE=1/1

A	16	CP910004-406	ADHESIVE	ASSY	1		LOCTITE 242
	15	RFP51112EJ0-015	PACKING	CR	6		PL T2x80x80 MS39000-004(SC70-F2(CR))
	14	RFP51112EJ0-014	PACKING	CR	6		PL T2x80x80 MS39000-004(SC70-F2(CR))
	13	RFP51112EJ0-013	SEAT,TAP	SUS304	2		PL T3x100x60
	12	RFP51112EJ0-012	STIFFENER	A1050P	2		T1
	11	RFP51112EJ0-011	STIFFENER	A1050P	2		T1
	10	RFP51112EJ0-010	DUAL_LOCK,FASTENER	ASSY	5		3M,SJ-3550 L=200(DUAL TAPE)
	9	RFP51112EJ0-009	DUAL_LOCK,FASTENER	ASSY	5		3M,SJ-3551 L=200(DUAL TAPE)
	8	RFP90013AN0	RUBBER BUSH	ASSY	1		F2.2332
	7	RFP51112EJ0-007	STIFFENER	SUS304	1		T1,L=1135
	6	RFP51112EJ0-006	SEAT,TAP	SUS304	1		PL T3x150x80
	5	RFP51112EJ0-005	RUBBER,SECTION	ASSY	1		RFP51011AN0,L=4600
	4	RS60607-098S	SCREW,F.H	SUS304	10		M4x14
	3	RFP51112EJ0-003	NUTSERT	SUS304	10		M4
	2	RFP51009AN0	PANEL,BLIND WINDOW	ASSY	1		
	1	RFP51112EJ0-001	PANEL	FRP	1		T2.5

품번 NO.	부품 번호 PART NO.	품명 DESCRIPTION	재질 MATERIAL	수량 Q'TY	중량 W.T	비고 REMARKS

승인 APP	JeongYul Lee 2014.10.14	재질 MAT'L ASSY	명칭 TITLE	WINDOW,MASK,TYPE H	
검도 CHK	KeongBong Park 2014.10.14	중량중 G.W			
설계 DGN	HeonUk Lee 2014.10.14	일반공차 MC MD CT	도면 번호 DRG. NO	RFP51112EJ0	Ver. 00 Rev. -A
제도 DRG	HeeSook Jeong 2014.10.14	B B B	SCALE 1/8	SHEET 1 of 1	
		SIZE A1			

RSD1402 RFP- 본-PRJT 설리본승

HYUNDAI Rotem 현대로템주식회사

참고문헌 REF. NO.

본 도면은 당사 재산으로써 허가없이 무단복사/배포 금지됨. PROPERTY OF ISSUING ENTITY. CANNOT BE DISTRIBUTED OR REPRODUCED WITHOUT AUTHORIZATION.

CATIA

기호 MARK	일자 DATE	내용 DETAIL OF REVISION(E.C ZONE)	설변번호 E.C NO.	설계 DGN	검도 CHK	승인 APP
Ax4	2014.12.18	ADDED PART NO.#16 & DIMENSION	RSD1402-U071	H.U.LEE	K.B.PARK	J.Y.LEE

구분	치수	A	B
일반 공차 GENERAL TOLERANCE	~ 40	2	4
	~ 30	2	3
	~ 10	1	1.5
	< 3	0.5	1
절삭 가공 M/C	~ 3150	-	7
	~ 1600	4	5
	~ 800	3	4
	~ 400	2	3
	~ 200	1.5	2
	~ 100	1	1.5
용접 공차 WELDING	용접 구조물 치수 (±)		
	~ 20M	4	6
	~ 15M	7	12
	~ 12M	6	10
	~ 8M	5	8
	~ 4M	4	6
	~ 2M	3	4
	~ 1M	2	3
	~ 315	1	2
	~ 120	1	2
	~ 30	1	1
주조 공차 CASTING	용접 구조물 치수 (±)		
	~ 20M	8	14
	~ 15M	7	12
	~ 12M	6	10
	~ 8M	5	8
	~ 4M	4	6
	~ 2M	3	4
	~ 1M	2	3
	~ 315	1	2
	~ 120	1	2
	~ 30	1	1
프레스 공차 PRESS	용접 구조물 치수 (±)		
	~ 20M	-	5.0
	~ 15M	-	5.0
	~ 12M	-	4.0
	~ 8M	-	3.0
	~ 4M	0.8	2.0
	~ 2M	0.5	1.2
	~ 1M	0.3	0.8
	~ 315	0.2	0.5
	~ 120	0.15	0.3
	~ 30	0.1	0.2
	3~6	0.05	0.1
기계 가공 MACHINING	기계 가공 (±)		
		A	B
		8.0	12.5
		3.2	6.3
		1.6	3.2
		0.8	1.6
		0.4	0.8
		0.2	0.4
		0.1	0.2
		0.05	0.1
주조 공차 CASTING	주조 표면 (±)		
		A	B
		25	50
		12.5	25
		6.3	12.5
		3.2	6.3
		1.6	3.2
		0.8	1.6
		0.4	0.8
		0.2	0.4
		0.1	0.2
일반 공차 GENERAL TOLERANCE			